HatchTech
INCUBATION TECHNOLOGY

Manual

Repair/Calibration Procedure Temporary Export

November 10, 2026

Temporary Export

HatchTech strongly advises customers against using the temporary export procedure, especially customers from the countries listed below:

Canada	Egypt	Jordan	Peru
Chile	El Salvador	Mauritius	Serbia
Colombia	Georgia	Mexico	Suriname
Costa Rica	Honduras	Namibia	Switzerland
Dominican Republic	Israel	Nicaragua	Tunisia
Ecuador	Jamaica	Panama	Ukraine

HatchTech has an EUR1 certificate number, which HatchTech always states at the Commercial Invoices, only in case the country of origin of the goods is within the EU. Except the U-Vaporators, all goods have countries of origin within the EU. This means that with this code, customers from one of the countries listed above may be able to complete customs clearance at a favourable rate, often 0%.

In case customer still decides to send the goods to HatchTech via temporary export:

1. Customer will replace the part with a spare.

2. Customer send an e-mail to repair@hatchtech.com incl. a complete Repair Form (Annex A) stating clearly you want to use temporary export.

3. Customer sends the part(s) that need to be repaired or calibrated in accordance with Delivered At Place (DAP) Incoterms® 2020, included with the completed Repair Form (Annex A). Without this form we can't process.
   It is essential that HatchTech receives the following;
   - Air Way Bill and/or track and trace code
   - The Packing List
   - The Commercial Invoice
   - The serial numbers of the parts which need to be repaired or calibrated.
     The serial numbers are requested by Dutch customs to process the temporary import.

The delivery address for the goods to be repaired/calibrated:

HatchTech B.V.
Attn.: HatchTech Repair Department
Innovatielaan 3
6745 XW De Klomp
The Netherlands

Packing List

Some important details to include in the Packing List are:

- Date
- Shipper and exporter contact information
- Consignee contact information
- The origin address of cargo

- The destination address of cargo
- Total number of packages within this shipment
- A detailed description of each package
- The volume and weight of each package
- A description and quantity of the Goods of each package
- The volume and weight of the entire shipment
- Commercial invoice number for this shipment

Commercial Invoice

When creating a Commercial Invoice, make sure to include as much detail as possible about the shipment. Some important details to include are:

- Date
- Shipper and exporter contact information
- Consignee contact information
- The origin address of cargo
- The destination address of cargo
- Packing List number for this shipment
- (Total) values of the Goods in EUR

Please be informed that missing Packing Lists and Commercial Invoices might cause delays and mistakes in processing.

For the additional administrative handling required for the temporary import of the goods, HatchTech will invoice additional handling costs (€25 per item that needs to be repaired or calibrated).
Customer is aware that this procedure will take at least four (4) weeks before HatchTech can return the goods to the customer.

4. After receiving your parts, our HatchTech Repair Department will check whether there is any water damage and/or sensors with broken housing (Annex B) and will inform the customer about their findings by e-mail.

   - If water damage and/or broken housing is found, we will not be able to repair/calibrate your parts and therefore we will send you a quotation to purchase new relevant parts. The damage part will be sent back to customer.

   HatchTech will quote and send Delivered At Place (DAP) Incoterms® 2020 (excluding custom charges).

5. Customer will receive a notification via MyHatchTech (our online customer portal) as soon as the parts depart from our warehouse.

   - HatchTech is required to check the transport documents with customers from the following countries before shipping the Goods: Bangladesh, Belarus, China, Georgia, India, Malaysia, Peru, Russia, Saudi Arabia, Switzerland, Thailand, Tunesia and Ukraine.

     Any demurrage costs that arises after approval of the transport documents by customers from one of these countries are for the account of the customer.

Annex A

Repair Form Temporary Export

HatchTech
INCUBATION TECHNOLOGY

Innovatielaan 3
6745 XW De Klomp
The Netherlands

+31 318 512 511
info@hatchtech.com
hatchtech.com

P.O. Box 256
3900 AG Veenendaal
The Netherlands

Repair/Calibration Form Temporary Export

CONTACT DETAILS	
Company Name	
Street Address	
City / State / ZIP	
Email Adress	
Phone	
Contact person	

ITEM INFORMATION

ITEM NO.	SERIAL NUMBER	DISCRIPTION	SOFTWARE VERSION / MACHINE TYPE	QTY

I would like to receive damaged parts back in case of non-reparable and I accept the extra shipment costs:

YES ☐ NO ☐

- The customer is responsible for the transport costs, HatchTech will ship those goods under delivery term DAP.
- Your damaged parts will be shipped separately from your repaired parts.

Annex B

TI-D-10047 Extreme Damage



1. Check 5-pin M12 connector (1).
    - If the thread is damaged to such an extent that a connection cable can no longer be screwed on → reject sensor TK-10047.
    - If pins are damaged / missing → reject sensor TK-10047.
2. Check probe body (2).
    - If probe body is cracked → reject sensor TK-10047.
    - If cover cap is cracked → continue.
3. Check measurement cuvette.
    - Unscrew cover cap (3).
    - Measurement cuvette is inside cover cap.
    - If measurement cuvette is cracked → reject sensor TK-10047.
    - If cover cap is cracked → continue.

TI-D-16285 Extreme Damage

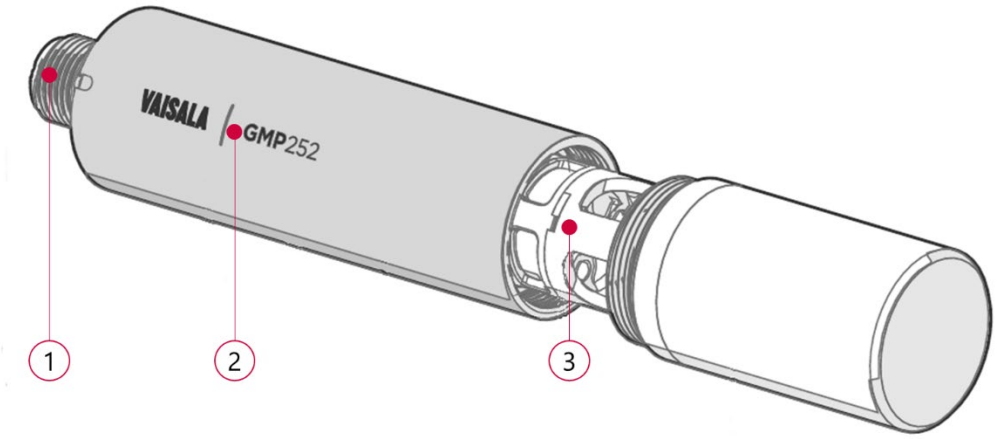

1. Check 5-pin M12 connector (1).
    - If the thread is damaged to such an extent that a connection cable can no longer be screwed on → reject sensor TK-16285.
    - If pins are damaged / missing → reject sensor TK-16285.
2. Check probe body (2).
    - If probe body is cracked → reject sensor TK-16285.
3. Check measurement cuvette (3).
    - If measurement cuvette is cracked → reject sensor TK-16285.

TI-D-01200 Extreme Damage

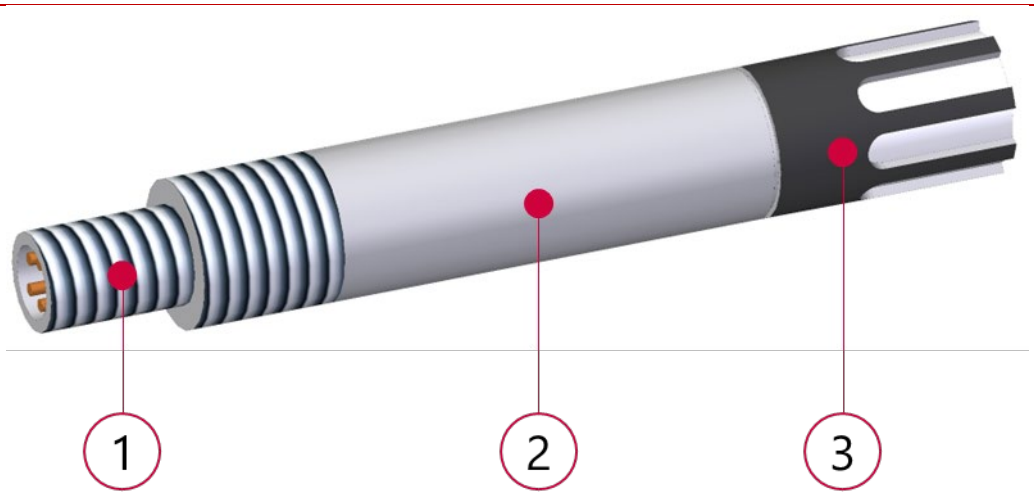

4. Check 5-pin M12 connector (1).
    - If the thread is damaged to such an extent that a connection cable can no longer be screwed on → reject sensor TK-01200.
    - If pins are damaged / missing → reject sensor TK-01200.
5. Check probe body (2).
    - If probe body is cracked → reject sensor TK-01200.
    - If filter cap (3) is cracked → continue.